3500 Series Aluminium Single/Duct Cover

Aluminium floor access covers for hard finishes

Features

- Covers can be fitted quickly and unobtrusively into all types of hard floor finish: ceramic tiles, marble, terrazzo, resin or parquet.
- Unique patented cover sections are tapered for easy removal, and frame sections give a good key to bedding mortar. Covers are precision-made to avoid distortion.
- Top edge seal on aluminium covers helps prevent dirt, grout or grinding waste penetrating joint between cover and frame. Single seals are an option on 3500 series.
- Lifting blocks are anchored to the inner frame. Stainless steel securing bolts are stiletto heel proof.
- Quality control to BS EN ISO 9001.

General notes on 3500 series floor access covers

Size – All covers are made to measure using the Howe Green patented system. This allows the manufacture of any size between the stated maximum and minimum dimensions. Sizes that may be thought 'non-standard' can therefore be obtained without delay and without cost surcharge. The versatile nature of the Howe Green system allows any configuration of ducts and branches to be created.

Weight – The weight of the access cover should be taken into account where ease of handling is an important consideration. In all cases reference should be made to the Manual Handling Operations Regulations 1992, which implement European Directive 90/269/EEC. If loads are excessive, consideration should be given to the use of hydraulic lifters, or our HSE 75 range.

HOWE GREEN
Telephone: +44 (0)1920 463230

AL

S

D

3500 Series Aluminium Single/Duct Cover

floor access covers for pedestrian traffic

Typical floor finishes

Ceramic tiles, marble, terrazzo, concrete, resin, wood and all hard floors.

Performance

Pedestrian traffic (including wheeled trolleys, sack trucks etc.) only.

Options

Sealed and secured.

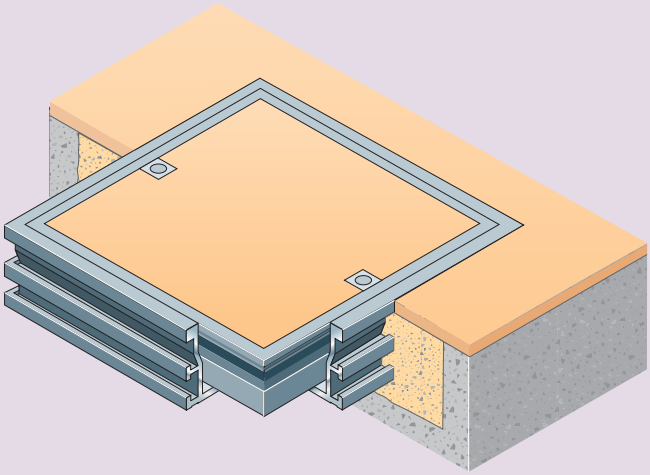

Cross section showing concrete and timber sub-floors (Scale 1:2)

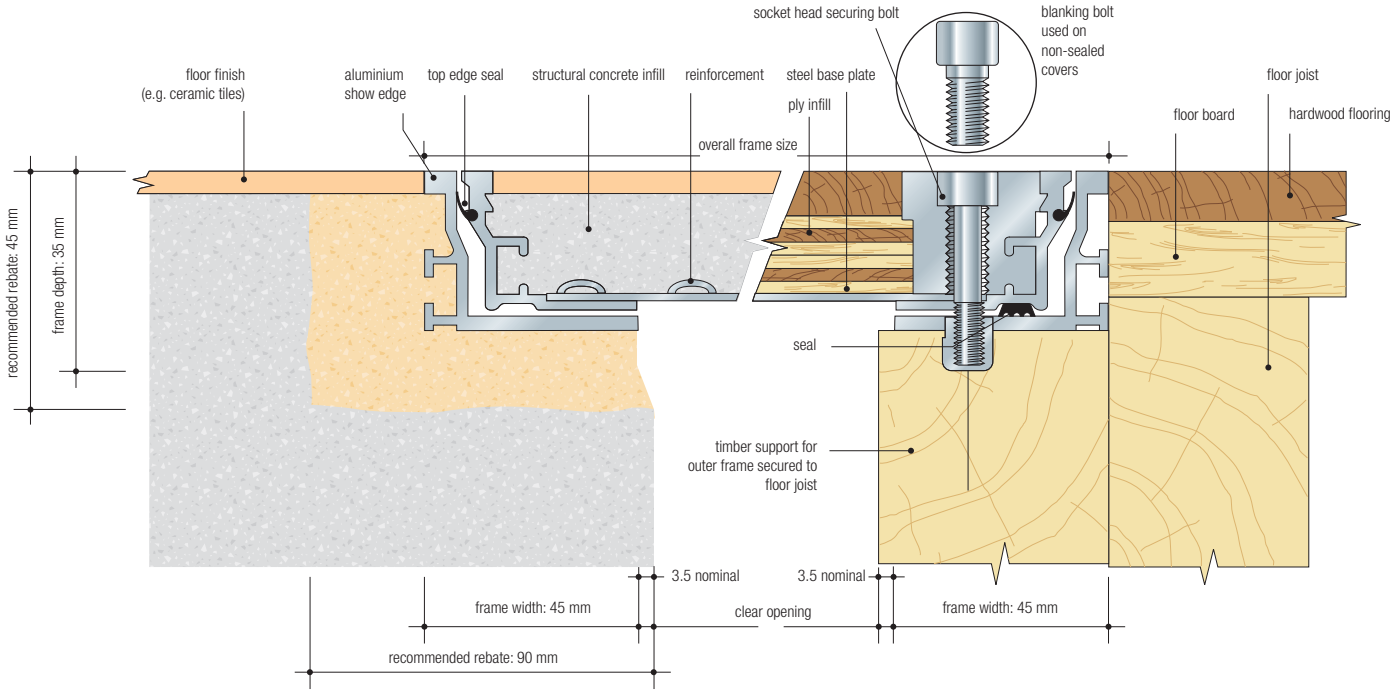

Typical specification clause for 3500 series

Recessed floor access/duct* covers and frames shall be Howe Green Ltd 3500 series with aluminium show edge, dirt seal and mechanically jointed corners, stainless steel/steel* baseplate sealed on seating with socket head securing bolts/ unsealed with blanking bolts*. Sizes shall be as shown on contract drawings nos ....† Covers are to be supplied complete with ....† sets of combined lifting/securing keys. All to be manufactured and supplied by Howe Green Ltd, Marsh Lane, Ware, Hertfordshire, SG12 9QQ, Great Britain, and installed in accordance with the manufacturer's installation details and sitework guide.

* Delete as appropriate. † Insert appropriate numbers & quantities

Size

Overall frame size = clear opening + 97 mm e.g. 200 mm clear opening = 297 mm overall frame width. Subject to correct infill/ installation (see separate guide). See also general notes on other side.

Weight

A 3500 series cover when filled with concrete weighs approx. 60 kg/m^2. See also general notes on other side.
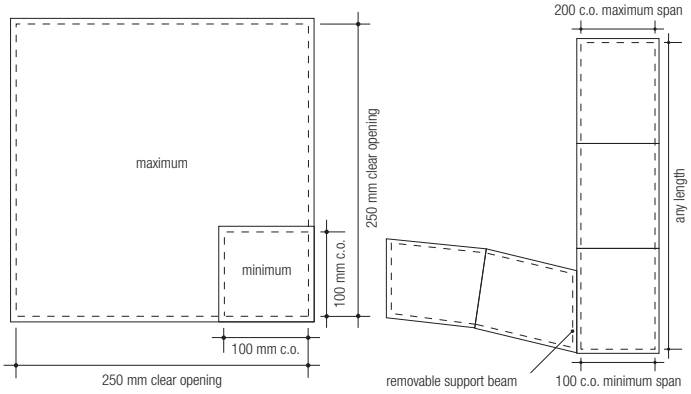
Maximum / minimum sizes